USER, MAINTENANCE
SPARE PARTS MANUAL
CONFORMITY DIRECTIVES CE
TRANSLATION OF THE ORIGINAL

EUROLIFT

DOUBLE POST ELECTRO-MECHANICAL LIFT

Z51

ZAVAGLI
Garage Equipment Manufacturer
via Malpasso, 17 - loc. Vaccherecciа – I-52022 Cavriglia (AR) - Italy
Tel. ++39-055941690 - Fax ++39-055944328
www.zavaglisanti.com - email : info@zavaglisanti.com

Version 01/2010

UK

Thank you for choosing an **Eurolift** garage-lifting-unit manufactured by **Zavagli**. The product has developed over many years of experience and on-going design improvement, intent on eliminating or minimising any operational risks and danger to the user. The design and construction of the lift complies with the latest standards issued in the **Machines Directive** and subsequent modifications.

WARNING !
This manual is an integral part of the product. .
Please ensure that you have carefully noted the warnings and that you have read all the instructions given in this manual as this information outlines important facts concerning safety, usage and maintenance.
The manual is to be kept in a safe place for further use.
Descriptions, diagrams and technical specifications included in this manual are not considered binding in terms of on-going development. The manufacturer reserves the right to alter any design or specification at any time that modifications or changes are deemed necessary.

WARNING !
Overloading the lift-unit to limits beyond its stated capacity is strictly forbidden.
The installation, assembly and machine start-up must be carried out by qualified personnel with previous professional experience.
This equipment must only be operated for the specific use for which it was designed and built.
The lift-unit described herein was designed to be used for lifting 4-wheel light motor vehicles and small commercial vehicles weighing less than 2700 kg.
Any other use is to be considered improper and is strictly forbidden.
The manufacturer will not be held liable for damages caused as a result of the above instructions being disregarded and not adhered to.

INDEX

INDEX	**4**
COMPLIANCE WITH STANDARDS & DIRECTIVES ON SAFETY	**5**
PRECAUTIONS CONCERNING SAFETY	**6**
INHERENT RISKS AND INDIVIDUAL PRECAUTIONAL MEASURES	**7**
Risks due to over-hanging loads	7
Risks due to loads in motion	7
Risks due to the presence of electric power (electric shock)	7
Risks due to the presence of mineral oils	7
Risks due to poor training and instruction	7
Risks due to noise levels	7
Risks due to falling	7
DESCRIPTION	**8**
TECHNICAL SPECIFICATIONS AND DIMENSIONS	**8**
LIMIT CONDITIONS OF USE	**9**
TRANSPORT	**9**
UN-PACKING	**9**
POSITIONING & INSTALLATION	**10**
SAFETY CLEARANCES	**11**
START-UP	**11**
ASSEMBLY INSTRUCTIONS Z51	**12**
ELECTRICAL INSTALLATION	**16**
POWER CONTROL UNIT	**17**
OPERATING INSTRUCTIONS	**17**
TROUBLESHOOTING	**18**
ACOUSTIC NOISE LEVEL	**19**
MAINTENANCE	**19**
Ordinary maintenance	19
Extraordinary maintenance (every 3 months)	20
GREASING (EVERY 3 MONTHS)	**21**
STORAGE	**21**
SCRAPPING THE UNIT	**21**
SPARE PARTS	**22**
Table.1 – Post assembly	22
Table.2 – Control panel post	24
Table.3 – Carriage assembly	26
Table.4 – Lift arm assembly	28
Table.5 – Platform	29
ELECTRICAL WIRING DIAGRAM	**30**
NAME PLATES	**31**
DECLARATION OF CONFORMITY TO DIRECTIVES	**32**

COMPLIANCE WITH STANDARDS & DIRECTIVES ON SAFETY

The double post electro-mechanical lift types **Z41** comply with the following standards & directives:

- Directive **2006/42/EC** (Machine safety)
- Directive **2004/108/EC** and related amendments (Electromagnetic compatibility)
- Directive **2006/95/EC** and subsequent amendments (Low voltage)

The following standards and specifications have been used for the design and construction:

- **UNI EN-ISO 12100** 1st part – Machinery safety – Fundamental concepts, general principles of design – Basic terminology and methodology.
- **UNI EN-ISO 12100** 2nd part – Machinery safety – Fundamental concepts, general principles of design – Technical specifications and principles.
- **UNI EN 1493** – Vehicle lifting platform.
- **CEI EN 60204-1** – Machinery safety – Electrical equipment of machines.
- **CEI EN 61000-6-4** – Electromagnetic compatibility. Generic standards on emissions.
- **CEI EN 61000-6-2** – Electromagnetic compatibility. Generic standards on immunity.

PRECAUTIONS CONCERNING SAFETY

The use of the equipment is permitted only to persons who have been specifically trained, who are authorised operators and are in good health.
The installation must be carried out by qualified personnel who must follow all the instructions set out in this manual.
Any form of tampering or any alteration to the equipment which has not been previously authorised by the manufacturer, will exonerate the manufacturer of any liabilities for damages or consequences due to the above actions and furthermore any warrantee on goods supplied will no longer be held valid.
Tampering or any removal of safety devices is a violation of regulations set out by the European Standard on safety.
The lift must not be operated by unauthorised persons.
It is prohibited for any person to mount the lift supporting arms or the vehicle being supported.
The lift unit may only be used in places which are indoors, under cover and protected from wind and in areas which are free of any danger of explosions or fire. The lift cannot and must not be used for any car wash purposes.
Any use of the lift which is not prescribed within this manual is prohibited.
A suitable dress code as prescribed by the governing laws where the lift will be operated should be adhered to.
The lift should not be operated in ambient conditions where the temperature should fall below (minus) 10 deg. Celsius.
It is advisable to make use of original auxiliary accessories. Our lifts are specially adapted to fit accessories supplied by ZAVAGLI.
Ensure that during any lifting or descending operation, there are no dangers present to persons or objects.
In case of an emergency action or any maintenance required to the unit, the main selector switch should be positioned on 0 and locked in position.
When working on a vehicle which has been lifted, the selector switch should be in the 0 position.
Always ensure that any removal of motor vehicle parts does not give rise to instability of the load, causing an unsafe and out of specification change to the weight distribution being supported on the lift arms. At the start of any lifting operation, apply a slight raising of the vehicle just off the ground and then proceed to check the load distribution of the vehicle by checking to make sure that it is suitably positioned and stable on the lift arms prior to applying any further lifting action.
In the event of the lift experiencing an operational problem, the unit should immediately be shut down and authorised technical assistance must be sought.

Any work done on the electrical system, no matter how slight, must only be carried out by a professionally qualified person.

INHERENT RISKS AND INDIVIDUAL PRECAUTIONAL MEASURES

Notwithstanding that the machine has been manufactured in full respect of the governing safety standards, there are inherent risks which cannot be avoided as they are part of the functional operation of this equipment.

RISKS DUE TO OVER-HANGING LOADS:

Care must be taken to identify the particular area affected by the presence of an over-hanging load by use of horizontal signage as outlined in this manual. Appropriate sign boards must be positioned in order to warn any approaching persons of the danger zone caused by the over-hanging load.

RISKS DUE TO LOADS IN MOTION:

Carefully identify the particular area affected by moving loads and provide the appropriate sign board.

RISKS DUE TO THE PRESENCE OF ELECTRIC POWER (ELECTRIC SHOCK):

The electrical system has been fitted-out in accordance with all the safety measures required by present standards. Danger areas which should not be accessed because of the presence of electrical power, have been clearly marked with warning signs. It has also been clearly warned that any repair work to any of the components is strictly forbidden unless the work is carried out by authorised and specialised personnel.

RISKS DUE TO THE PRESENCE OF MINERAL OILS:

Please refer to the relevant chapter on “MAINTENANCE”.

RISKS DUE TO POOR TRAINING AND INSTRUCTION:

All the appropriate signage and name-plates which are necessary for the particular use of this equipment has been provided. This manual has been made available to all persons working to install, adjust, operate and repair the machine enforcing the need to consult the manual before any work is carried out. It is also a clearly stated warning that no unauthorised person is allowed to use the machine.

RISKS DUE TO NOISE LEVELS:

Apart from precautions taken to normally protect from any other source of noise which may be present within the working environment, the acoustic noise level from the lifting machine does not warrant the use of any protective measures.

RISKS DUE TO FALLING:

It is strictly prohibited, and clearly marked out by signage, that no person may mount onto any of the lifting components of the unit. .

DESCRIPTION

Double post lifting unit equipped with a set of two lift-arm carriages driven by lead-screw devices.
The drive from one lead-screw to the other is provided by a chain transmission.
A special metallic control cable provides three functions: to operate the descent limit switch, a safety feature in case of excessive and dangerous wear to the load-bearing lead-screw nut and in case of an emergency due to the drive chain breaking. A mechanical safety feature is provided by a release clamp, which will engage in the case of excessive wear to the load-bearing nut and will act to allow the descent of the load, but will prevent any further ascending lift motion.
The drive motor is protected in case of overload lifting conditions and any overheating will cause the motor to stop; it is also protected to prevent any sudden start-up, should there be a main power supply return after an interruption caused by an electrical power failure.

TECHNICAL SPECIFICATIONS AND DIMENSIONS

	Z51
Capacity:	3500 Kg
Power supply:	380/220 V - 50Hz 3 phase
Power load:	3 KW
Weight:	680 Kg
Ascent & descent rate:	0,033 m/s

Fig. 1 – Layout dimensions

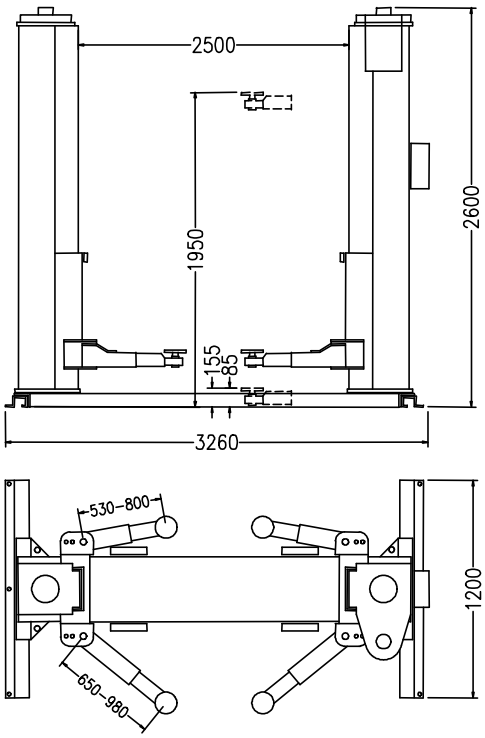

LIMIT CONDITIONS OF USE

The lifting unit has been designed and manufactured for motor vehicle loads.
Any use of this machine to lift heavier vehicles or any other irregular object is to be considered an improper use of the lifting unit..

Maximum and minimum dimensions of vehicles			
	Length	**Height**	**Width**
Minimum dimension mm	2200	1050	1200
Maximum dimension mm	5200	1900	1950

The machine has been designed and manufactured for use in a covered workshop environment.

Conditions of use:
Ambient temperature from 5° to 40° C.
Humidity up to 90% at 20° Celsius.

ATTENZIONE

WARNING ! Any use of the machine for purposes other than those described and specified by the manufacturer in the instruction manual, is to be considered an improper use and therefore "ZAVAGLI SANTI" garage equipment, disclaims all liabilities in the case of an operator failing to abide by the instructions and procedures as outlined by the manufacturer.

TRANSPORT

The lifts are delivered packaged with nylon covering strapped down with adhesive tape and well secured on wooden pallets.
The solid design of the machines and their structural shape, provide and ensure safe transportation and storage without any damage to the units.
The weight of the machine is approximately 650 Kg.
Utmost care and safety precautions must be followed during these operations in order to avoid any damage to objects, to the machine itself and to persons.

UN-PACKING

On unpacking the unit check to see that the instruction manual has been included, that the machine is complete and check for any visible signs of damage.
Should there be any doubts, do not proceed to use the equipment and seek technical assistance at an authorised dealer.
Carefully dispose of all the packaging material by ensuring that it is brought to a waste collection point out of reach of children and animals.

POSITIONING & INSTALLATION

The following points are strictly to be followed to ensure a correct positioning and installation of the unit.

1) Check that the BASE PLATE fixture points are perfectly horizontal.
2) The lifting unit must be placed on a levelled concrete floor having a B250 minimum strength specification and a minimum thickness of 150 mm.

WARNING ! The lift unit posts act on the floor support area with a max. loading value of 2700 Kg. at each post.

3) The lift must be installed in an enclosed and covered area which is well protected from outside weather conditions and it must allow for a safe roof clearance at the max. vehicle height lift position.
4) The work area must be sufficiently illuminated having a min. prescribed light intensity value of 50 Lux, measured at floor level & at the control panel area.
5) Electrical connections to the main power supply must be carried out as described in the instruction manual section - ELECTRICAL INSTALLATION.
6) Never apply any lubricant or oily substance to the lift arm surfaces.

SAFETY CLEARANCES

The required safety clearances for proper use & operation are shown in Fig. 2. When moving within the safety clearance zone of the machine area, one must take utmost care both for persons & objects and it is important to keep the area clear of any obstructions, irrespective of whether the lift is loaded or unloaded.

Fig. 2 – Safety clearance dimensions

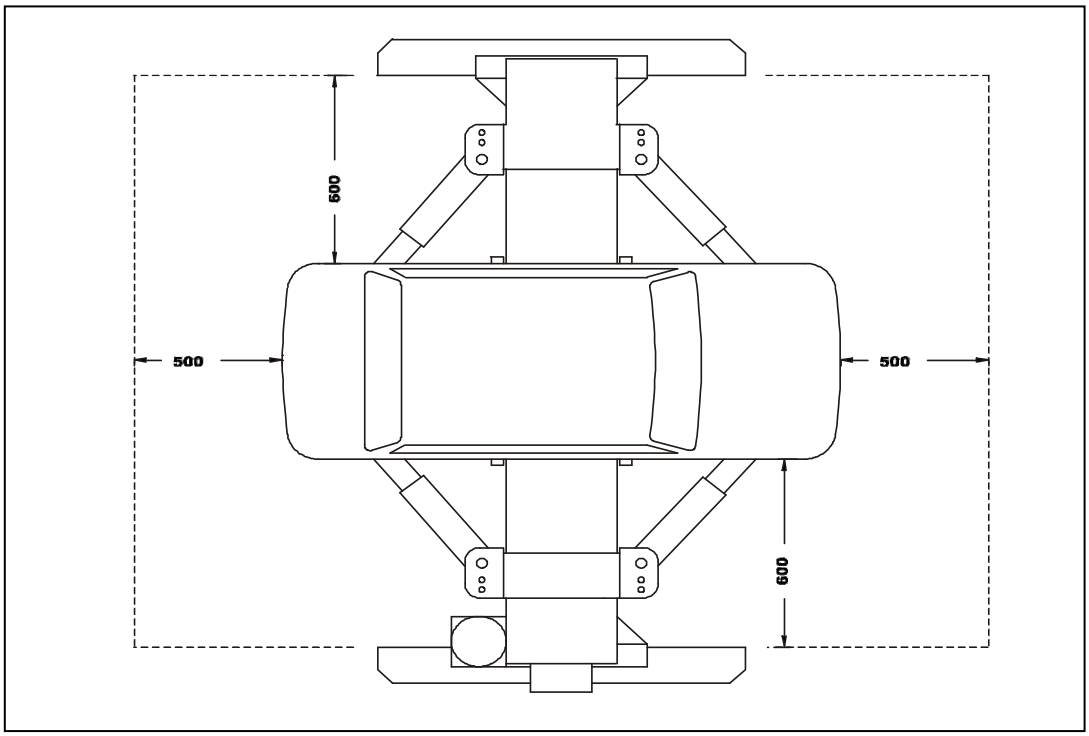

From the control panel position, the operator must be able to have a clear view of the complete lift unit and the surrounding area, in order to ensure that no unauthorised persons approach the area and furthermore he must be able to watch for any dangerously positioned objects within the safe zone.

START-UP

Prior to any machine use and especially on the occasion of a first start-up for a new machine or in the case where the machine has been moved to a new location, it is important to note the following technical precautions and suggestions concerning some of the electrical connections.

In particular:

- Never connect the machine to the power mains until the unit has been fully assembled and properly inspected for use as per the instructions provided.
- Ensure that the area surrounding the machine has enough clearance to allow its proper functional use and that no other persons apart from the operator are within the perimeter of the working area.

ASSEMBLY INSTRUCTIONS Z51

After removing all packaging and protective materials, check the machine through for completeness and any signs of damage. Then proceed to the assembly of the various components as per the instructions and the related descriptive schematics illustrated below.

Fig. 3 – Assembly instructions layout.

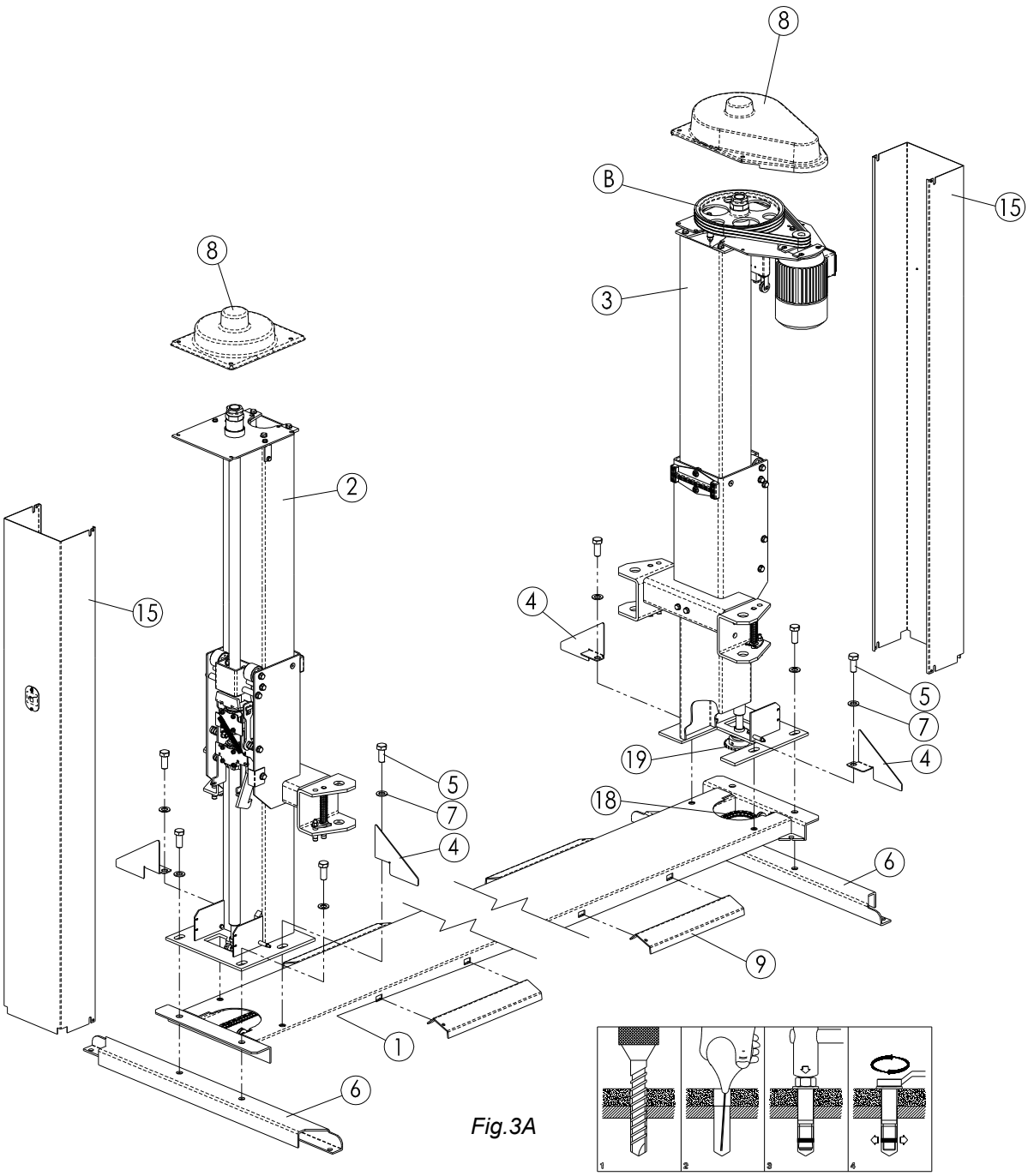

Fig.3A

1) Position the platform (1) and base strips (6) as desired.
2) Remove the body covers (15) from post (2-3).
3) Check the two measurements (A) between the carriages and the base positions, if the values where not the same, proceed to adjust the pulley (B) until the two measurements are the equal.
4) Fit the chain (18) to the sprockets (19). Proceed to secure the posts and tighten-up with the 8 bolts (5), washers (7) and fitting the edge strips (9) as shown in Fig. 3

ATTENZIONE

WARNING ! Check that there is no chain slack and that it is tight.

Fig. 4 – Assembly instructions

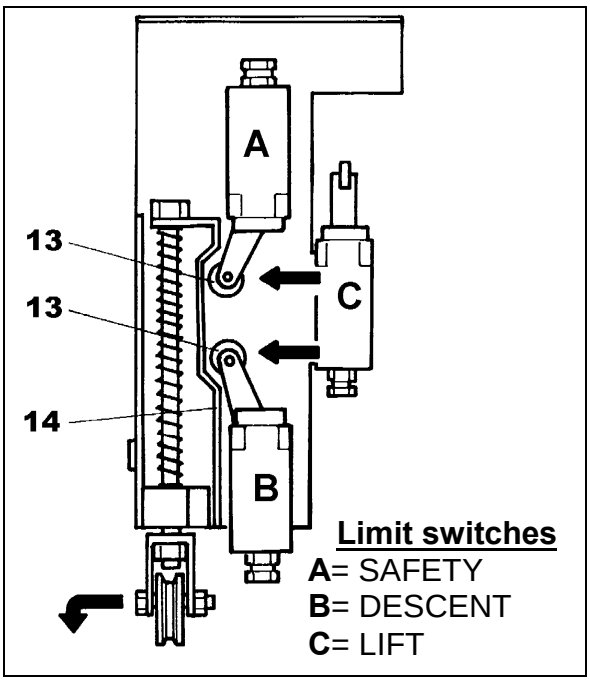

5) Proceed to fit the special control cable (12), which is mounted inside the post (3) and the cable winding must follow the instructions in Fig. 5 by using the pulley supports (11) which provide the required direction change. Pass the cable under the platform by means of attaching it to the steel cable in the platform and proceed to tie the cable (12) to the clamp (10) inside the post (2), in such a way as to ensure that the limit switch roller wheels (13) position themselves in the centre of the cam (14) at the upper post (3) position (Fig. 4).

Fig. 5 – Special control cable assembly

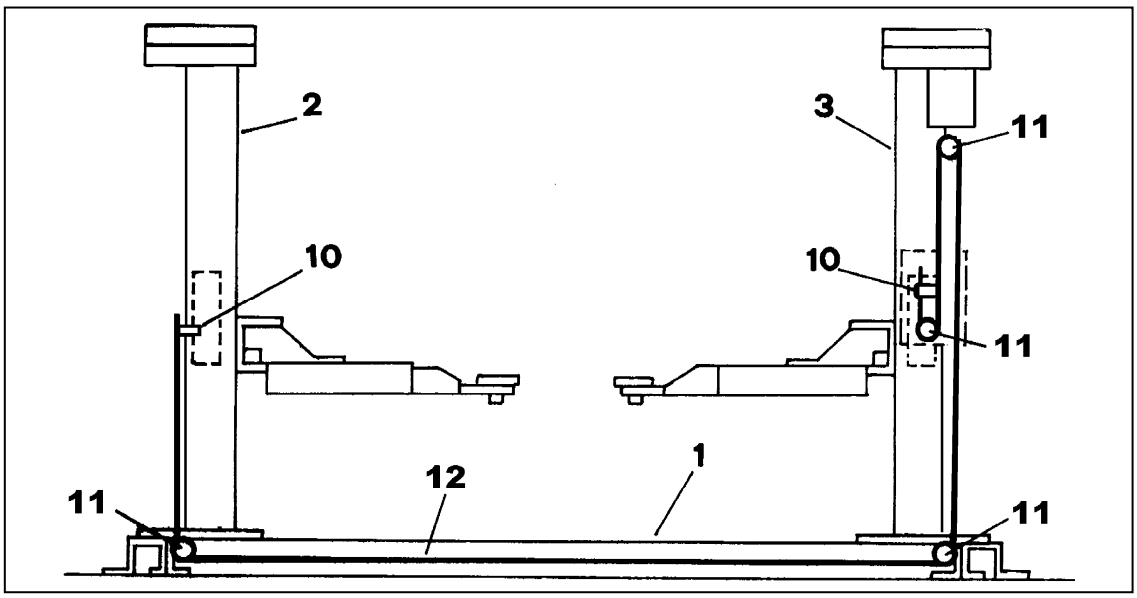

6) Fix the lift unit down to the floor by means of N°10 bolts M12x120 – 8.8, following the instructions in (Fig.3A):

   - Using a drill having the same diameter of the bolt fixing stud, drill a hole 150 mm deep.
   - Clean out the hole.
   - Insert the floor fixing studs by using a hammer to apply soft tapping to the bolt head..
   - The floor fixing bolts must then be tightened by means of a torque wrench which is set at 7kg.m (should this tightening value not be attained by the torque wrench, it would indicate that the drill hole dia. was too large or that the floor concrete-mix has insufficient strength). Should there be any doubts about the floor strength or any problems related to the fixing of the posts to the base, please contact and call for technical support at an authorised dealer.

During the bolt tightening procedure ensure that the posts remain perfectly upright and that the bolt fixing stub does not cause the post to shift position. To ensure for operational safety, a second bolt tightness test will need to be carried out after the units has been operated through 10 complete lift and descent cycles at max. weight load conditions. This procedure will in any case have to be repeated at every three month interval.

7) Fill 6 Kg. of SAE 10W oil into the platform reservoir.
   Lubricate the lead screw with SAE 90 oil.
   Using a grease pump fill the 2 grease nipples positioned at the two lower supports of the lead screw.

8) The connections to the main power board must be carried out as explained in the chapter on ELECTRICAL INSTALLATION.

9) Carry out a test run to ensure proper functioning of the unit by operating the lift and check the working condition. At this point the INSTALLATION REPORT must be filled out.

10) Close up the body panels(15) and place the covers (8) in their correct positions and screw them down. Fix the wheel ramps to the platform using the appropriate holes. Then place the arms into the position slots on the carriage support and secure them with the appropriate pins.

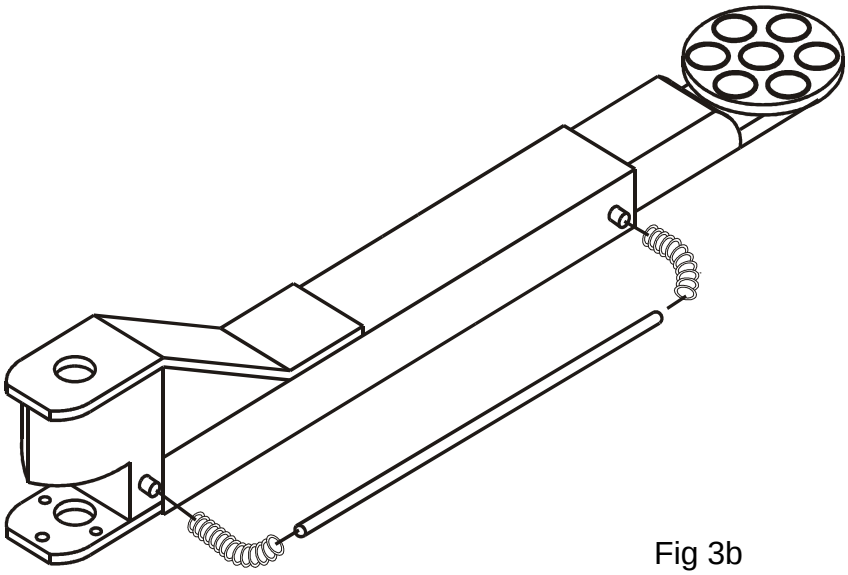

Fig 3b

12) Montare le protezioni ai quattro bracci del sollevartore come mostrato in ffigura (3b)

ATTENZIONE

Any damages resulting from the failure to observe the above instructions will not be liable for charge to the manufacturer and furthermore the warrantee clause may become invalid.

ELECTRICAL INSTALLATION

The lift is normally supplied to be operated with a 380V/50HZ 3 phase power supply. If however the only power supply available is 220V/50Hz single phase, then a specific request will have to be made.
Check for the correct voltage rating indicated on the machine's name plate before connecting the power.
Check the machine through that it has been positioned correctly and that the assembly of all components has been completed prior to connecting the power.
The mains power installation must conform to the C.E.I. 64.8 (CENELEC HD 384, IEC 364-4-41) standards.
The installation must include: an earth leakage system and the workshop's installation must be fitted with protection devices which will act to guarantee an automatic power shut down as required and outlined by the standards above.

Fig. 6 - Electrical wiring

The connections to the main power supply must be carried out as follows:

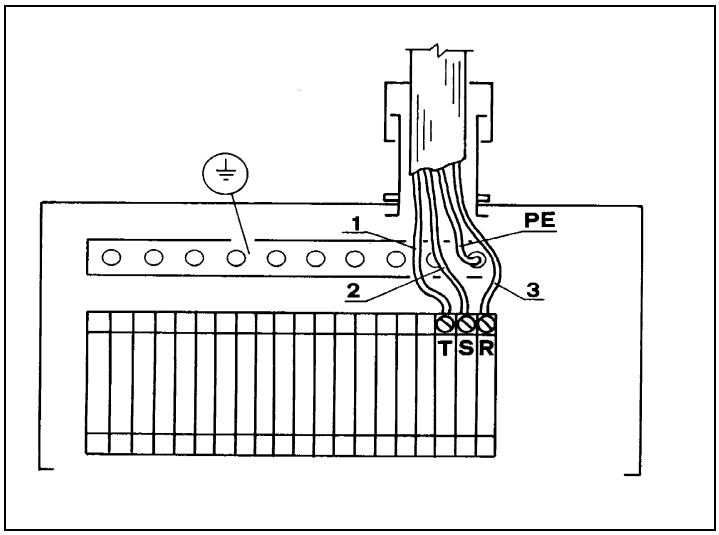

1. Open the control box.
2. Feed the main power cable through the entry fitting.
3. Connect cable phase wires to points T,S,R and the earth wire to the earthing points PE. as clearly shown in (fig.6)

Check that the carriage ascent and descent motions correspond to the arrow indications on the selector. If this is not the case then proceed to invert the two power phase wires from the power supply.
The detailed electrical system of the lifting unit is described in the wiring diagram. To connect to the main power supply, use a 4x4 mm cable and mains plug as per EU standards. After the electrical system has been wired-up , it is necessary to carry out an electrical continuity test.

ATTENZIONE

WARNING! Repairs to the electrical system regardless of how trivial these may be, must be carried out by professionally qualified personnel.

WARNING! The main power supply must be connected to an earth leakage device; it is prohibited to connect directly to a power line.

POWER CONTROL UNIT

Fig. 7 – Power control unit

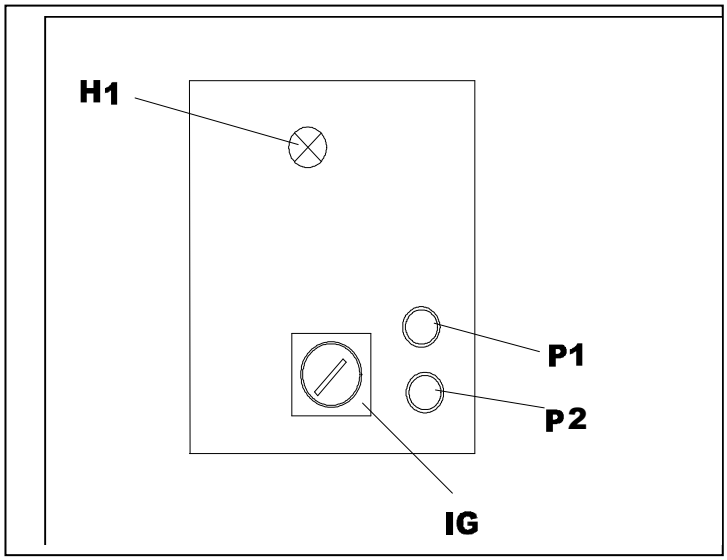

The power control unit is made up of the following items:

IG – Main selector switch having 3 selector positions LIFT / STOP / DESCEND.

H1 – Warning light to indicate active power source.

P1 – Lift Push

P2 – Descente Push

In case of emergency, it is possible to stop the lift by switching the power supply selector switch IG to STOP.

OPERATING INSTRUCTIONS

Whenever using the unit, it is necessary to understand and bear in mind all the warnings which have been mentioned the section on IMPORTANT SAFETY CONSIDERATIONS. This lift unit should only be operated by authorised persons. It is reminded that any unauthorised use of the lift unit by persons who are not aware of the operational procedures outlined in this manual, may cause a dangerous situation to arise.

The typical operational cycle of the unit is as follows:

- Positioning of the vehicle over the lifting arms.
- Initial slight lift-off of the vehicle position just above floor level.
- Inspection and checking for secure and stable positioning of the vehicle.
- Lifting of the vehicle to the desired height by means of the selector switch “IG”.
- The descent of the vehicle by means of the selector switch “IG”.

ATTENZIONE

WARNING ! Any work beneath the vehicle must only to be carried out after the main switch has been set in position "0" and after the switch has been securely locked. Should the need arise for any special assistance, please consult an authorised dealer and request the address and contact details of the original-parts supplier. A full list of spare parts is enclosed in this instruction manual.
Prior to lowering the lift, ensure that the area directly beneath the vehicle is completely clear of any objects which may cause an obstruction.

TROUBLESHOOTING

FAULT	REASON	*CURE*
The lift will not engage or it comes to a stop during its operation.	- An obstruction to the lift-arm descent. - Load-bearing nut is worn. - Circuit breaker. - Lift & descent limit switches. - Push button controls. - Three phase main supply. - Release clamp has activated.	*Call for the assistance of a qualified technician.*
	- Control limit switches are out of position in the cam.	*Ensure that the limit switches are positioned in the centre of the cam. (See fig.4).*

ACOUSTIC NOISE LEVEL

Tests carried out, as prescribed in the European Standards Directive 89/392 Appendix. I par. 7.4 and measured as required by the ISO 3746 standards during maximum limit conditions at the installation during a full load lifting operation:
RECORDED AN ATMOSPHERIC ACOUSTIC NOISE LEVEL: 61dB(A) at the operator control panel.

MAINTENANCE

There are no set maintenance procedures required for this lifting unit.
The particular design, the choice of construction materials and body paint work all contribute to minimising the need for any maintenance.
However the important point we wish to advise is that the various operations set out under the sections on Ordinary Maintenance and Extraordinary Maintenance are specifically aimed at providing maximum safety standards, reliability and proper functioning throughout the machine's operational life-cycle.

ORDINARY MAINTENANCE

The instructions set-out in this section are specifically set-out for the machine operator or any person duly authorised by him.
Instructions which are not included in this section are to be considered as extraordinary operations and must only be carried out by qualified persons.

Daily procedures to be carried out at the end of the work cycle:
- Clean up the BASE PLATE area and the lifting arm units.
- Check the main power supply cable to ensure that there are no cuts or abrasive wear marks.
- Check the working condition of the safety devices used for the protection of the electrical system.

All cleaning and maintenance procedures must be carried out by authorised persons as set-out in the instructions.
All cleaning and maintenance procedures must be carried out using the maximum safety precautions.

EXTRAORDINARY MAINTENANCE (EVERY 3 MONTHS)
- Safety check to the electric system: cable insulation, proper functioning of the differential protection device, that the cable ducting is intact.
- Check that all mechanical components and post base plates are securely fastened.

Check for the following:

1 – Motor dive belts.

Press down on the belt and check that the deflection does not exceed 5 mm; should this not be the case, the belt tension should be corrected by adjusting the motor base plate position.
Check for even the slightest indication of belt fraying , if this should be the case, proceed to replace these.

Fig. 8 - Load-bearing & safety lead-screw nut units

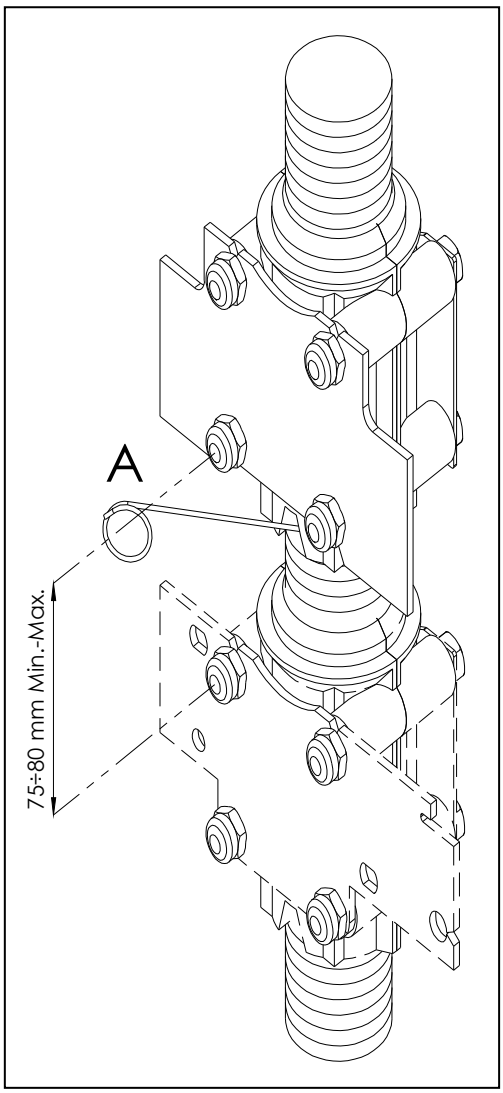

2 - Special control cable.

Inspect the special control cable and check its general condition for signs of outside damage or wear and tear, should this be the case, proceed to replace.

3 – Position of limit switches (Fig. 4).

The control limit switches should be positioned at the centre of the cam; any change to this position to within a 3 mm range is due to mechanical settling, in which case the fixing brackets should be adjusted to the correct position.

4 - Screws

Check that the space between the notches of the carrying nut and the main nut does not exceed 1,5 mm. This can be measured using the caliper (Ref. A - Fig.8), found on the inside of the main electrical unit. If this is not be the case, replace the screw, keeping in mind that the distance between the two screw must be **80-85 mm (Fig.8).**

GREASING (EVERY 3 MONTHS)

Lubricate the lead screw with SAE90 oil.
With the appropriate grease pump, apply grease to the two (2) grease nipples at the two (2) lower supports of the lead screw. Using the oil can pump, lubricate along the lead screw which is positioned within the main post; to gain access to this section, it will be necessary to remove the hexagonal inspection hatch placed on the side above each body panel.

Fig. 7 – Greasing

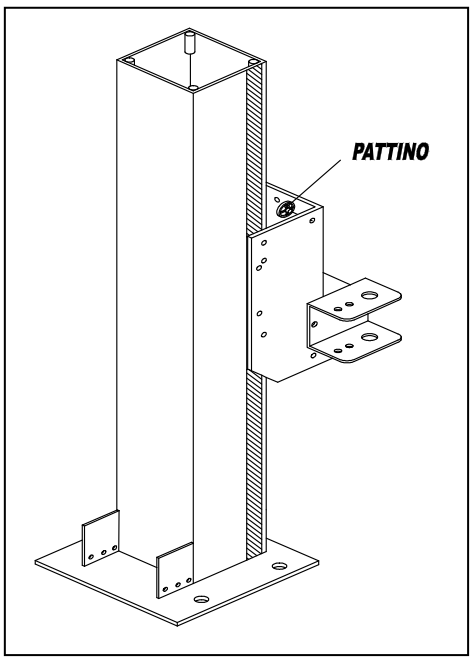

Regularly check that the arm restraints slide up and down smoothly for an always correct functioning of the machine. To maintain this smoothness, oil the columns every three months along the *WHOLE* length of the guide wheel travel, as indicated by the *SHADED* part in Fig. 7.

STORAGE

In case the lift is kept in storage for a long period, it is necessary to disconnect any power supply points, grease those parts which would get damaged in the event of dry hardening.
In the event that the unit should be brought out of storage for operational use, check for any cuts or excessive wear of the electrical cables and check for the proper functioning of all the limit switches used both operationally and for safety purposes.

SCRAPPING THE UNIT

In the event of a decision to no longer use the lifting device, the scrapping of the unit should start by removing any oil contained inside the platform. The whole unit should be treated as a special waste item and thus it should be broken down into the various material part types; scrapping procedures are to be carried out in accordance with laws and regulations of the country where the unit has been used.

SPARE PARTS

TABLE. 1 – POST ASSEMBLY

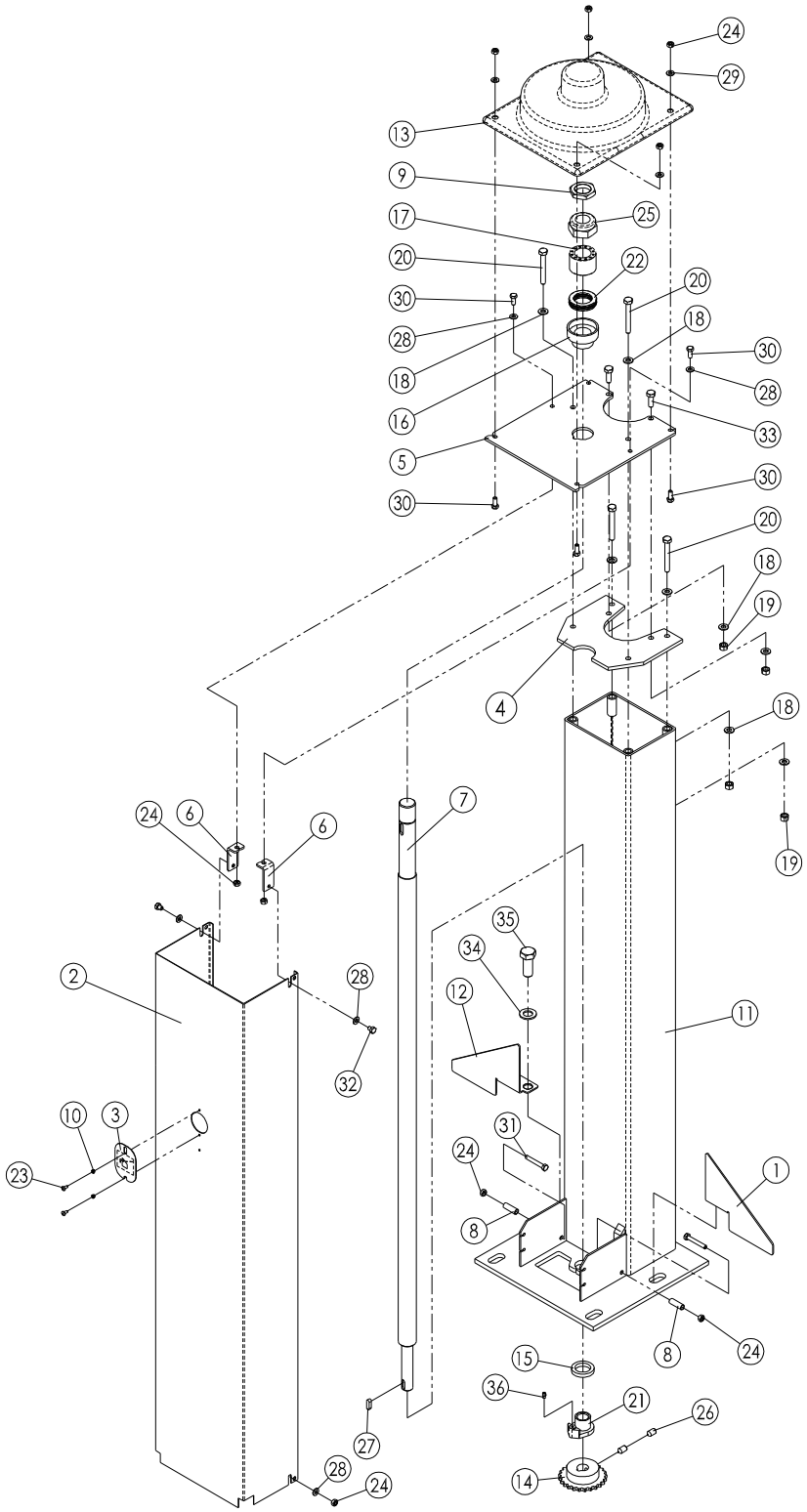

Nr.	DESCRIZIONE
1	FENDER
2	CARTER
3	COVER
4	PLATE
5	PLATE
6	BRACKET
7	SCREW
8	SPACER
9	NUT
10	SPACER
11	COLUMN
12	FENDER
13	COVER
14	SPROCKET
15	SPRING
16	SUPPORT
17	SPACER
18	WASHER
19	NUT
20	SCREW
21	SUPPORT
22	BEARING
23	SCREW
24	NUT
25	NUT
26	SET SCREW
27	SPACER
28	WASHER
29	WASHER
30	SCREW
31	SCREW
32	SCREW
33	SCREW
34	WASHER
35	SCREW
36	GREASE NIPPLE

TABLE. 2 – CONTROL PANEL POST

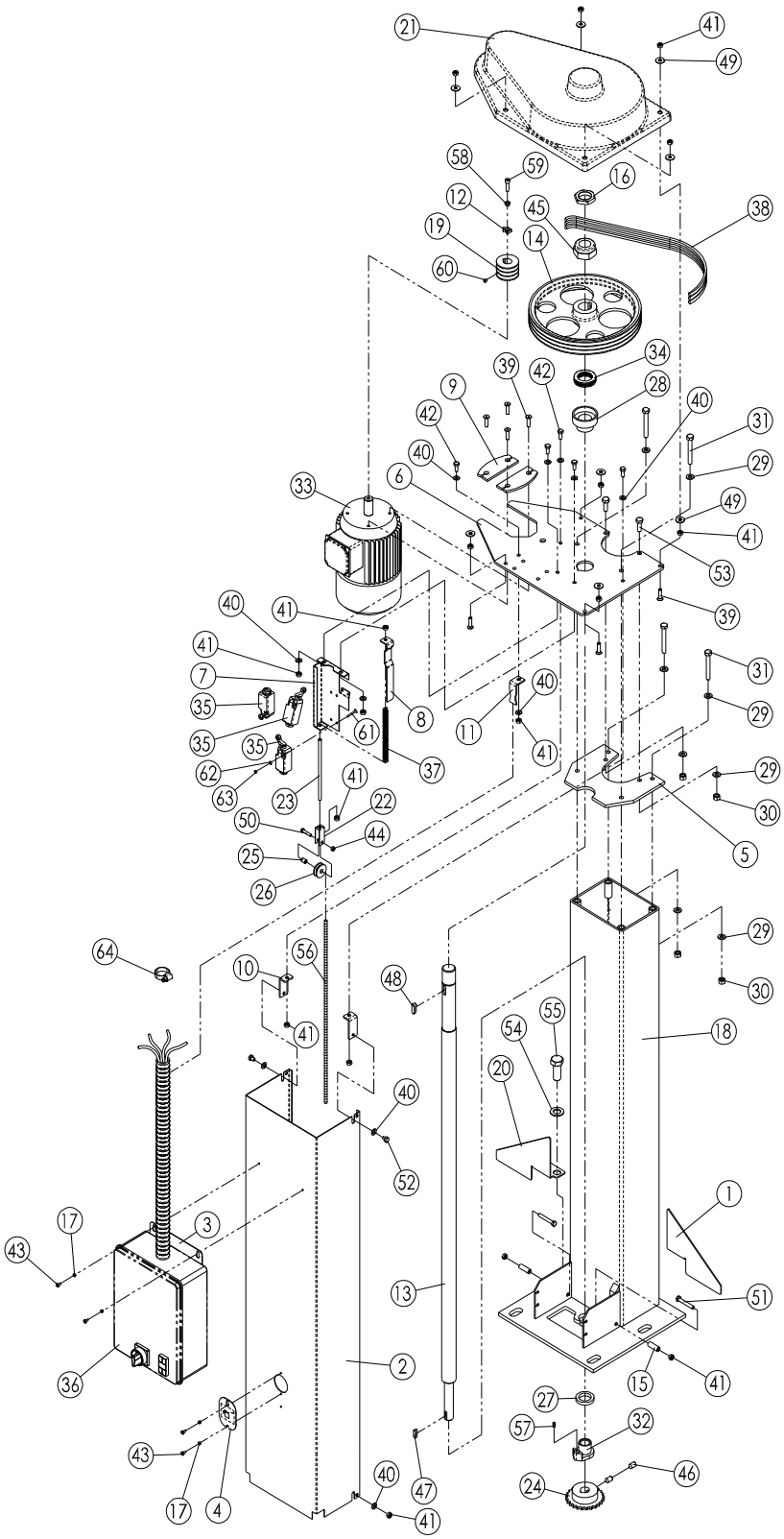

Nr.	DESCRIZIONE
1	FENDER
2	CARTER
3	PLATE
4	COVER
5	PLATE
6	PLATE
7	BRACKET
8	CAM
9	PLATE
10	BRACKET
11	BRACKET
12	SCREW
13	SCREW
14	PULLEY
15	SPACER
16	NUT
17	SPACER
18	COLUMN
19	PULLEY
20	FENDER
21	COVER
22	BRACKET
23	ADJUSTING SCREW
24	SPROCKET
25	SPACER
26	PULLEY
27	SPRING
28	SUPPORT
29	WASHER
30	NUT
31	SCREW
32	SUPPORT

33	MOTOR
34	BEARING
35	MICRO
36	ELECTRIC BOX
37	SPRING
38	BELT
39	SCREW
40	WASHER
41	NUT
42	SCREW
43	SCREW
44	NUT
45	NUT
46	SCREW
47	LINGUETTA
48	LINGUETTA
49	WASHER
50	SCREW
51	SCREW
52	SCREW
53	SCREW
54	WASHER
55	SCREW
56	CABLE
57	GREASE NIPPLE
58	SPACER
59	SCREW
60	SCREW
61	SCREW
62	WASHER
63	NUT
64	FASCETTA

TABLE .3 – CARRIAGE ASSEMBLY

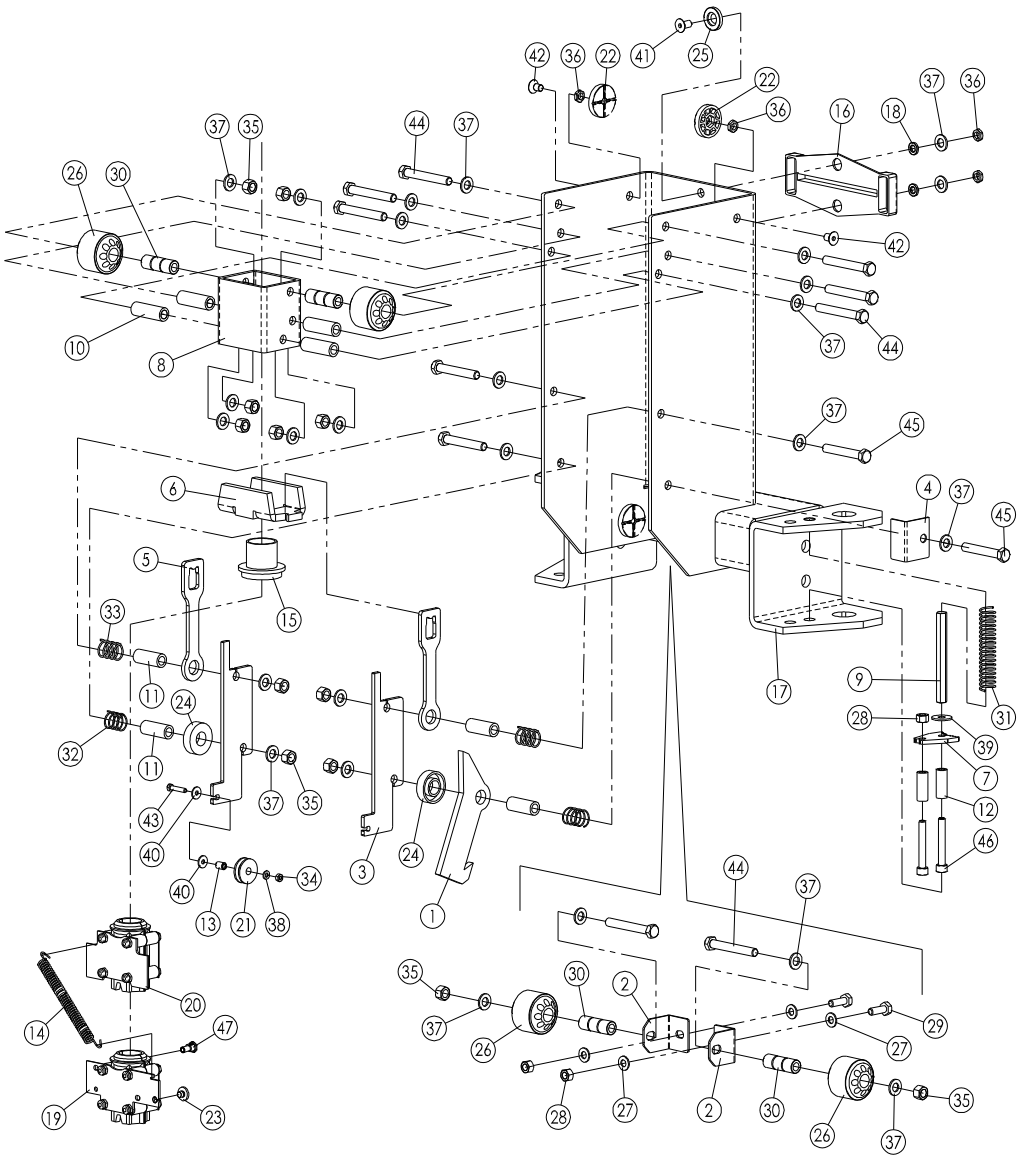

Nr.	DESCRIZIONE
1	HOOK
2	SUPPORT
3	BRACKET
4	BRACKET
5	BRACKET
6	ROLLER BLOCK
7	LOCKING RACK
8	ROLLER BLOCK
9	PIN
10	SPACER
11	SPACER
12	SPACER
13	SPACER
14	SPRING
15	SWIDEL
16	DOOR STOP
17	CARRIAGE
18	SPACER
19	SAFETY NUT
20	LOAD BEARING NUT
21	PULLEY
22	GUIDE
23	SPACER
24	ROLLER
25	GUIDE
26	ROLLER
27	WASHER
28	NUT
29	SCREW
30	PIN
31	SPRING
32	SPRING
33	SPRING
34	NUT
35	NUT
36	NUT
37	WASHER
38	WASHER
39	WASHER
40	WASHER
41	SCREW
42	SCREW
43	SCREW
44	SCREW
45	SCREW
46	SCREW
47	NUT

TABLE. 4 – LIFT ARM ASSEMBLY

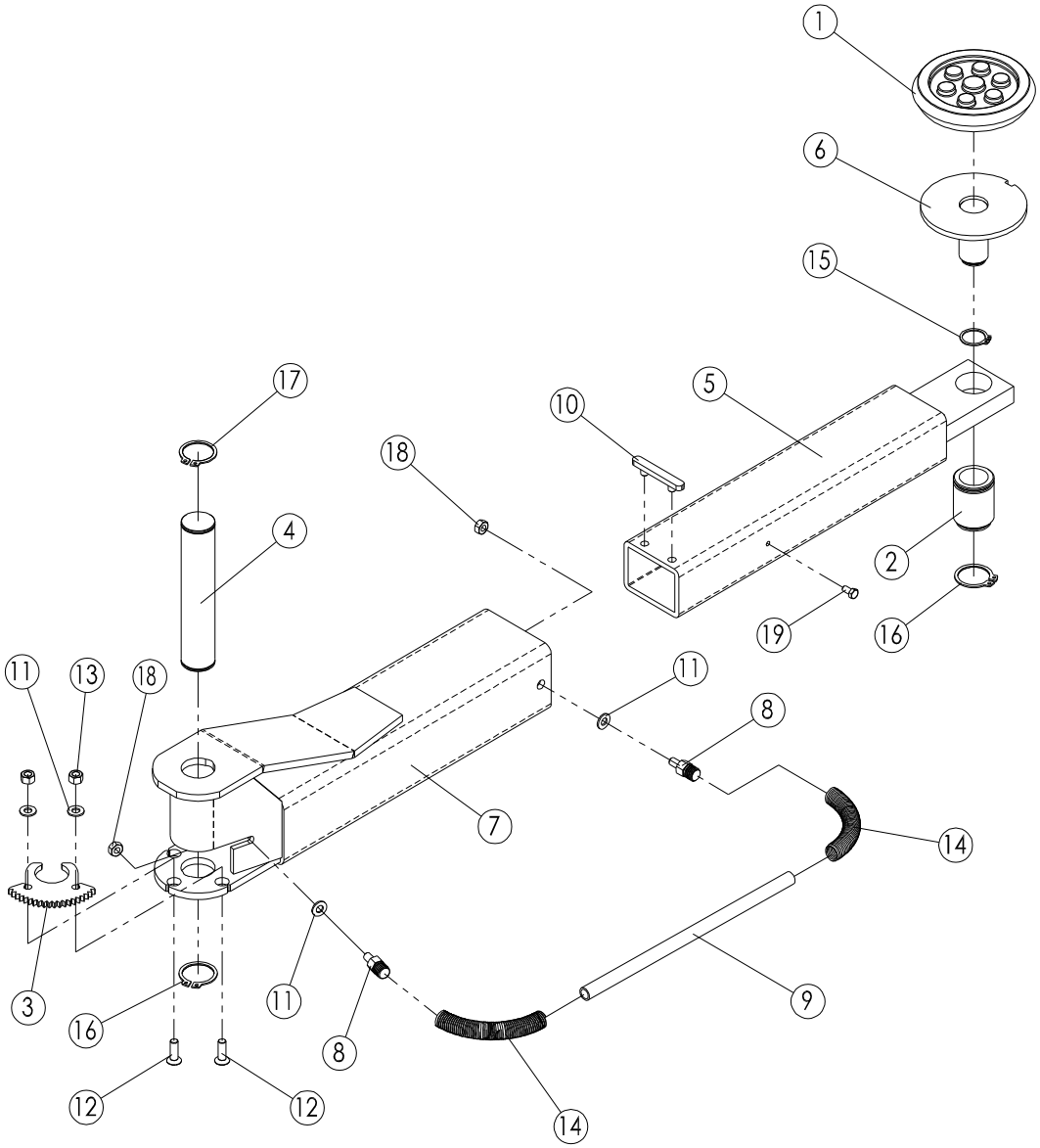

Nr.	DESCRIZIONE
1	WEAR PLATE
2	BUSHING
3	LOCKING RACK
4	PIN
5	STABILISER ARM
6	SUPPORT
7	STABILISER ARM
8	BLOCK FENDER
9	STAFF

10	GUIDE
11	WASHER
12	SCREW
13	NUT
14	SPRING
15	SEEGER
16	SEEGER
17	SEEGER
18	NUT
19	SCREW

TABLE. 5 – PLATFORM

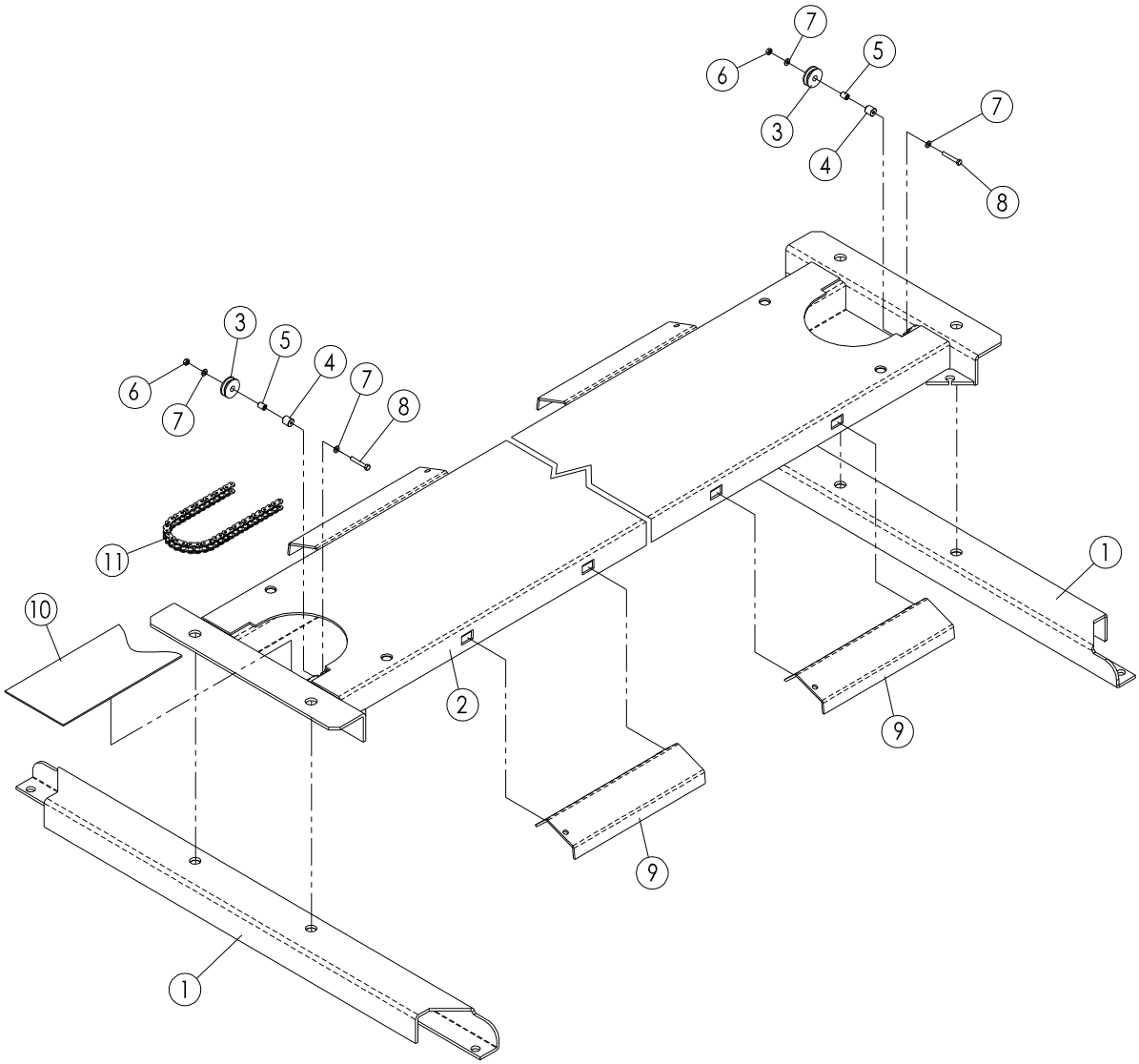

Nr.	DESCRIPTION
1	BASE STRIP
2	PLATFORM
3	PULLEY
4	SPACER
5	SCREW
6	NUT
7	WASHER
8	SCREW
9	RAMP
10	PLASTIC
11	CHAIN

ELECTRICAL WIRING DIAGRAM

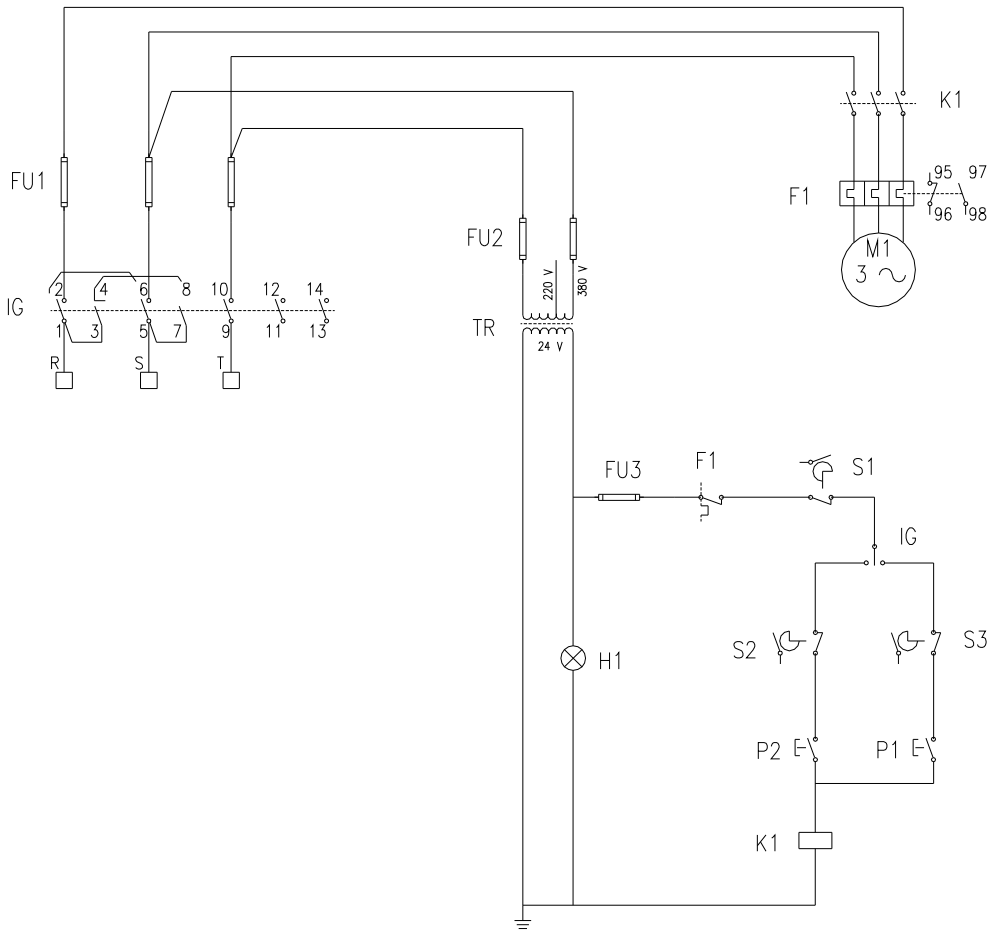

RIF.	DESCRIPTION
IG	MAIN SWITCH
K1	CONTACT
F1	CIRCUIT BREAKER
M1	ELECTRIC MOTOR
FU1	CONTROL FUSE
FU2	PRIMARY FUSE
FU3	SECONDARY FUSE

TR	TRANSFORMER
P1	LIFT PUSH
P2	DESCENT PUSH
S1	CONTROL
S2	LIMIT SWITCH UP
S3	LIMIT SWITCH DOWN
H1	POWER INDICATOR LAMP

NAME PLATES

The following adhesive name plates are to be found in their respective positions placed on the lift unit as indicated in the diagram below.
Any removal of these name plates will cause the guarantee terms to be made non-valid and furthermore the manufacturer will not be held liable for any resulting damage by the use of the lift unit.
In the case of damage, consequent illegibility or loss of any one or more of these name plates which are fixed to the machine, these must be re-ordered by indicating the plate no. as listed below and ensure that the new replaced plate is positioned on the machine exactly as indicated below.

Z51

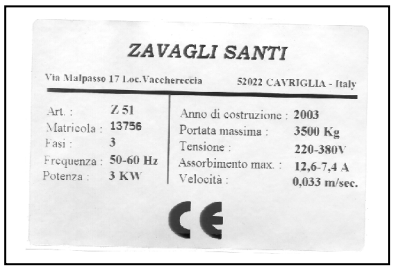

1

2

3

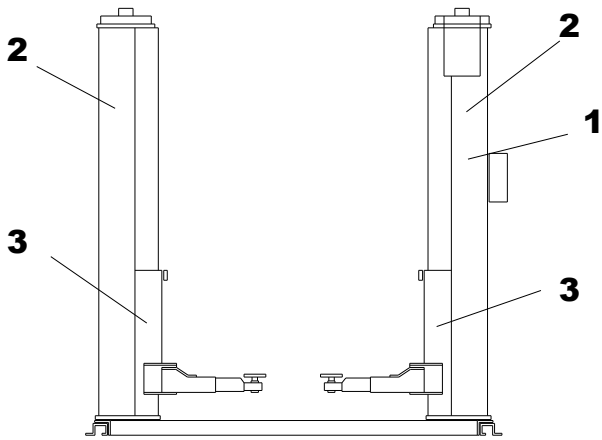

DECLARATION OF CONFORMITY TO DIRECTIVES

WE, **ZAVAGLI SANTI**
Via Malpasso 17, Loc. Vaccherecciа, Cavriglia (AR) Italy

WE HEREBY DECLARE THAT THE MACHINERY KNOWN AS: TWO-COLUMN ELECTROMECHANICAL VEHICLE LIFT

Model ***Z51***

SERIAL No. ..... YEAR OF MANUFACTURE.....

TO WHICH THIS DECLARATION REFERS, IS IN CONFORMITY WITH THE FOLLOWING DISPOSITIONS:

- Directive **2006/42/EC** (Machine safety)
- Directive **2004/108/EC** and related amendments (Electromagnetic compatibility)
- Directive **2006/95/EC** and subsequent amendments (Low voltage)

The following standards and specifications have been used for the design and construction:

- **UNI EN-ISO 12100** 1st part – Machinery safety – Fundamental concepts, general principles of design – Basic terminology and methodology.
- **UNI EN-ISO 12100** 2nd part – Machinery safety – Fundamental concepts, general principles of design – Technical specifications and principles.
- **UNI EN 1493** – Vehicle lifting platform.
- **CEI EN 60204-1** – Machinery safety – Electrical equipment of machines.
- **CEI EN 61000-6-4** – Electromagnetic compatibility. Generic standards on emissions.
- **CEI EN 61000-6-2** – Electromagnetic compatibility. Generic standards on immunity.

We hereby further declare that the person authorised to compose the technical dossier is:ZAVAGLI SANTI Via Malpasso 17, Loc. Vaccherecciа, Cavriglia (AR) Italy

ZAVAGLI SANTI

Cavriglia
(date) (the Legal Representative)

NAME AND ADDRESS OF THE BODY NOTIFIED AND I.C.E.P.I. IDENTIFICATION NUMBER - VIA EMILIA PARMENSE 11/A, 29010 PONTENURE, PIACENZA 0066
"CE" CERTIFICATION NUMBER 11DM4MA02

FACSIMILE